# LED DOWNLIGHT 12W - SERIES H
# PRODUCT INDOOR

ASLED

# LED DOWNLIGHT 12W



SPECIFICATION

## SPECIFICATION

- Order Code: DH012
- Input Voltage: 24Vdc, 220Vac, Dimmable
- Dimension: L100xW105xH195 mm
- Chip LED: CREE
- Power consumption: 12W
- Luminous Flux: 1080lm at 3000K, 12W, CRI>90, 36°
- Material: Aluminium
- Efficiency: 90%
- Environment temperature: from -30° to 60°C
- Color[CRI]: 3000K, 4000K, 5000K
- CRI > 90
- Beam angle: 12° 25° 36° 50°
- IP Rating: IP20
- Life time: 50.000 hours
- Control: ON/OFF, 0 - 10V, DALI, DMX
  + RoHS; EMC protection
  + IEC 62031LED
  + IEC 60598 Luminaires

IP20 RoHS CE

# LED DOWNLIGHT 12W



TECHNICAL DETAILS

## TECHNICAL DETAILS

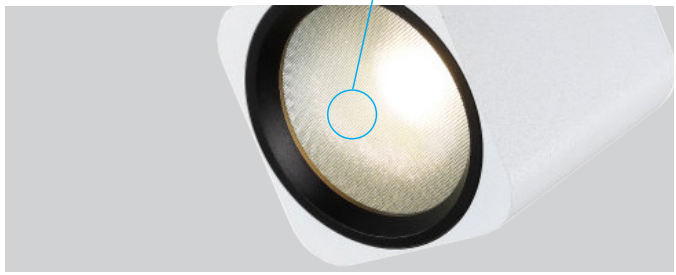


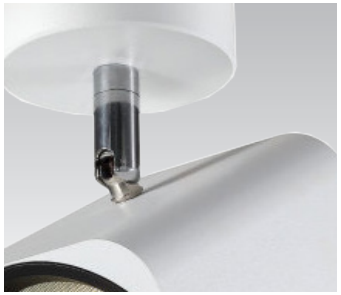

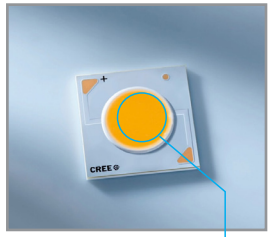


Legace

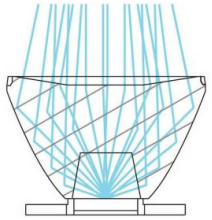

Select Color XX

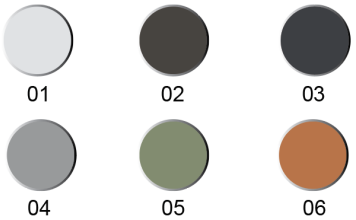


## DIMENSIONS

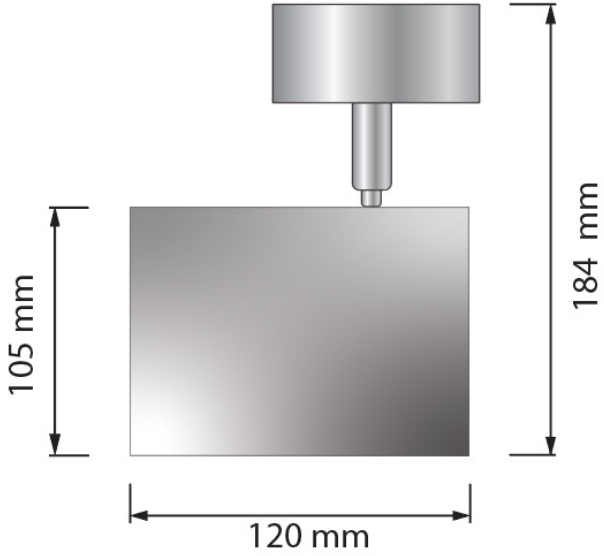


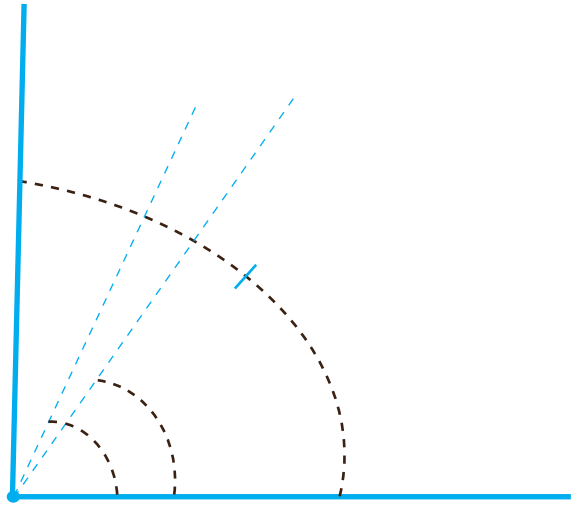

Beam Angle: 12° 24° 36° 50°

# LED DOWNLIGHT 12W



## SPECIFICATION

PHOTOMETRIC CURVE

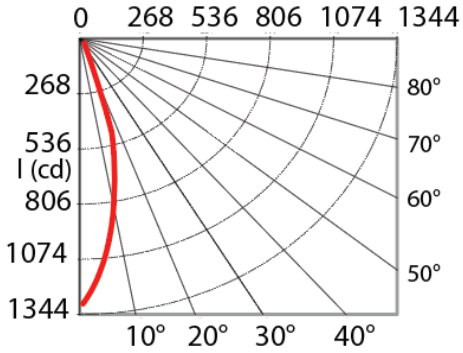


BEAM 36° AMPLITUDE DIAGRAM

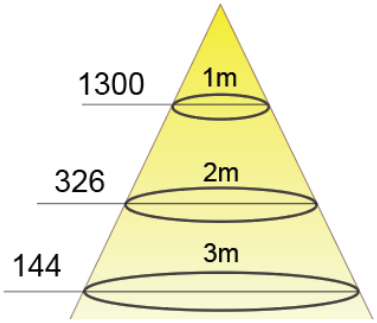


## INSTALLATION

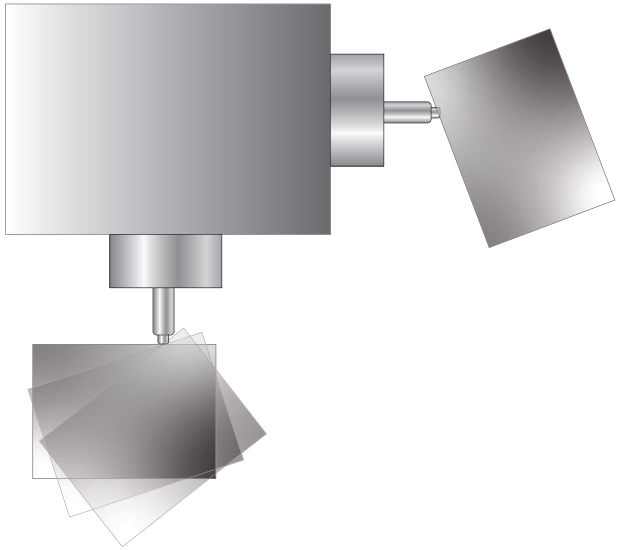

# LED DOWNLIGHT 12W- Applications

INDOOR

OFFICE

HOTEL/RESTAURANT

# LED DOWNLIGHT 12W - Applications

THANKS FOR YOUR

# ATTENTION