LED DOWNLIGHT 2X6W - SERIES G
PRODUCT INDOOR

ASLED

LED DOWNLIGHT 2X6W

SPECIFICATION

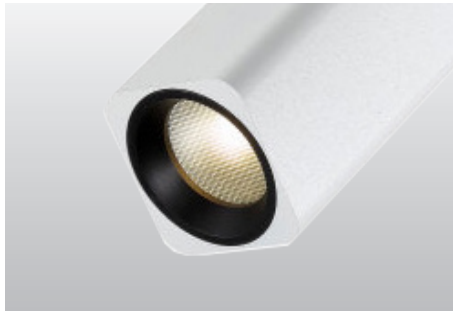

SPECIFICATION

- Order Code: DG012
- Input Voltage: 24Vdc, 220Vac, Dimmable
- Dimension: L300xW140xH135 mm
- Chip LED: CREE
- Power consumption: 2x6W
- Luminous Flux: 2x540lm at 3000K, 2x6W, CRI>90, 36°
- Material: Aluminium
- Efficiency: 90%
- Environment temperature: from -30° to 60°C
- Color[CRI]: 3000K, 4000K, 5000K
- CRI > 90
- Beam angle: 12° 25° 36° 50°
- IP Rating: IP20
- Life time: 50.000 hours
- Control: ON/OFF, 0 - 10V, DALI, DMX
  + RoHS; EMC protection
  + IEC 62031LED
  + IEC 60598 Luminaires

IP20 RoHS CE

LED DOWNLIGHT 2X6W

TECHNICAL DETAILS

TECHNICAL DETAILS

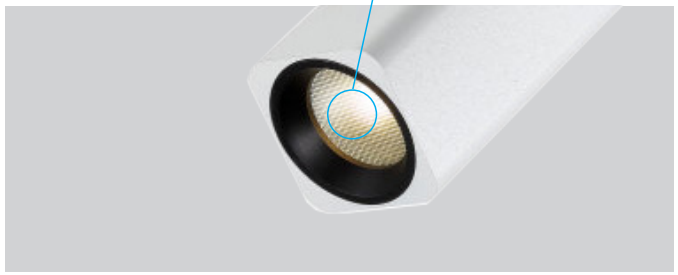

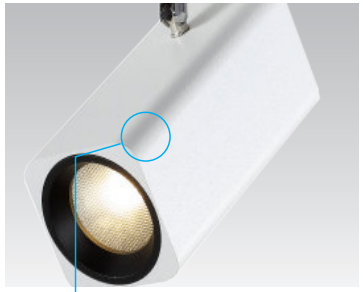

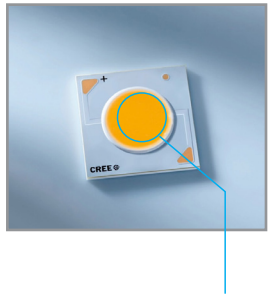

Legace

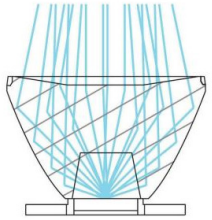

Select Color XX

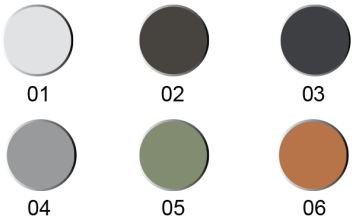

DIMENSIONS

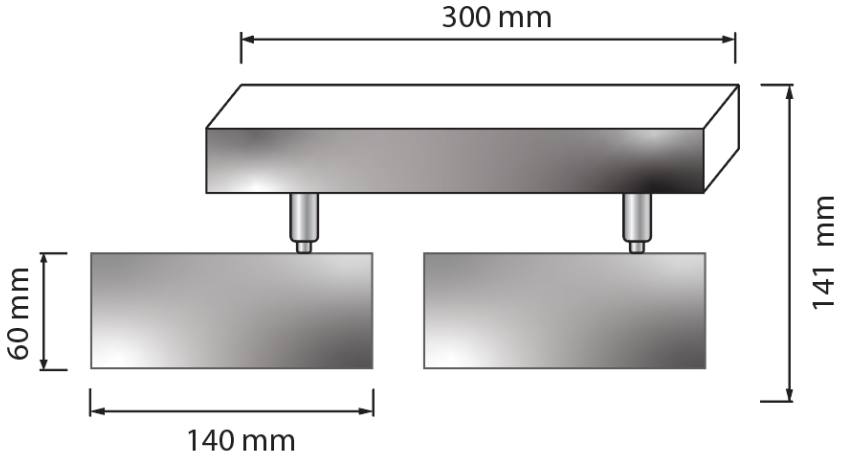

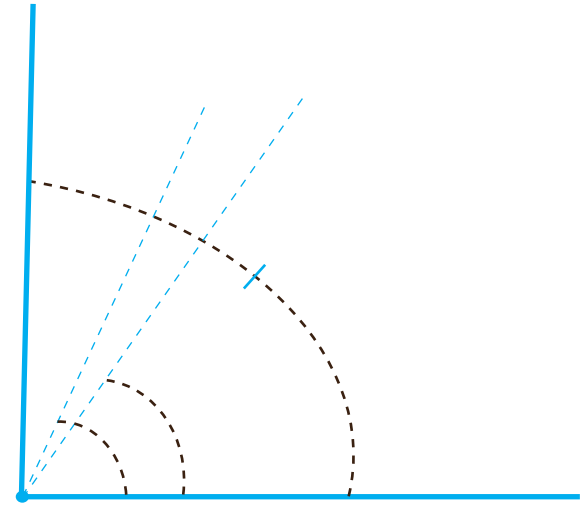

Beam Angle: 12° 24° 36° 50°

LED DOWNLIGHT 2X6W

SPECIFICATION

2x6W 3000K

PHOTOMETRIC CURVE

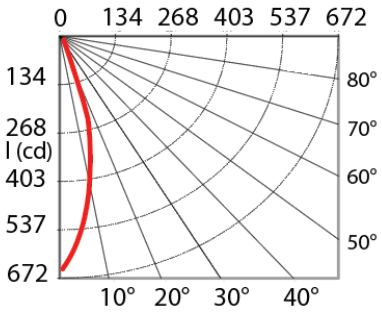

BEAM 36° AMPLITUDE DIAGRAM

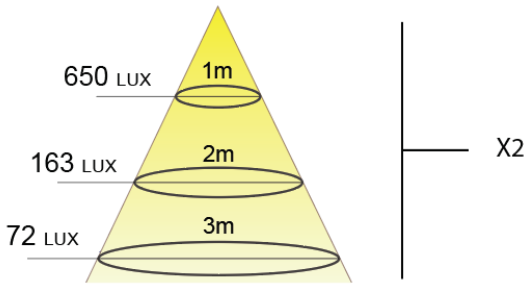

INSTALLATION

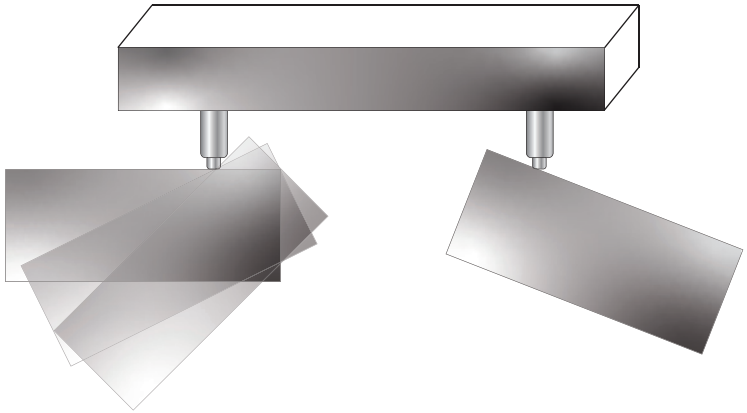

LED DOWNLIGHT 2X6W- Applications

INDOOR

OFFICE

HOTEL/RESTAURANT

LED DOWNLIGHT 2X6W - Applications

THANKS FOR YOUR

ATTENTION