LED FLOODLIGHT 36W - SERIES A
PRODUCT OUTDOOR

ASLED

LED FLOODLIGHT 36W

SPECCIFICATION

SPECCIFICATION

- Order Code: FA036, FA036RGBW
- Input Voltage: 24VDC, 48VDC, 220VAC
- Dimension: L134xW63xH162 mm
- Chip LED: CREE
- Power consumption: 36W
- Lumen Output: 3240 lm
- Material: Aluminium
- Efficiency: 90%
- Environment temperature: from -30° to 60°C
- Color[CRI]: 3000K, 4000k, 5000k, RGBW
- CRI: >90
- Beam angle: 12° 24° 36° 50°
- IP Rating: IP68
- Life time: 50.000 hour
- Control: ON/OFF, DIM 0 - 10V, DALI, DMX512
- Standards:
  + RoHS; EMC protection
  + IEC 62031LED
  + IEC 60598 Luminaires

IP68

LED FLOODLIGHT 36W

TECHNICAL DETAILS

TECHNICAL DETAILS

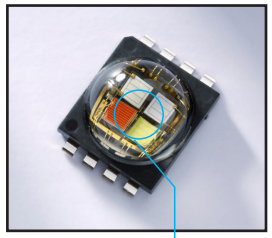

Lens Clear

Legace

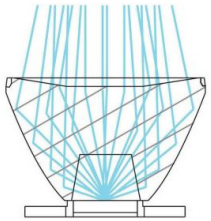

Select Color XX

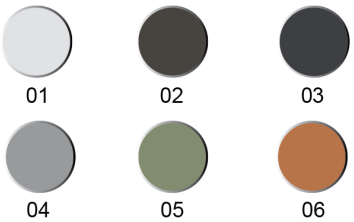

DIMENSIONS

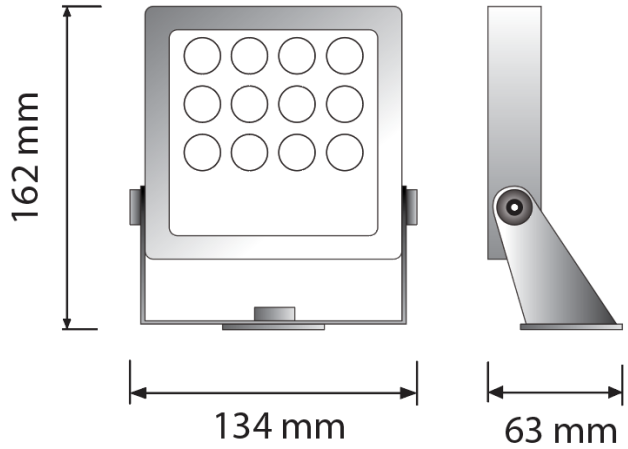

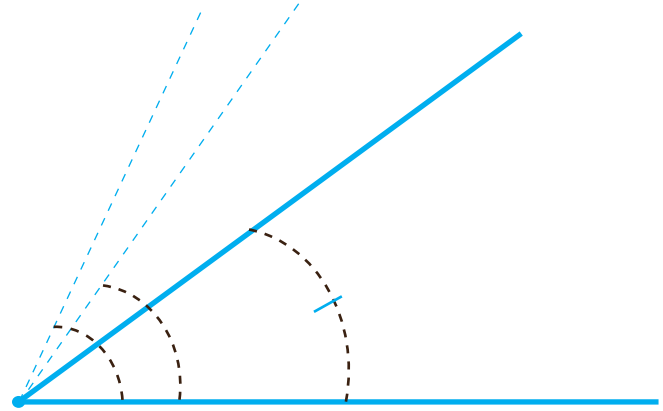

Beam Angle: 12° 24° 36° 50°

LED FLOODLIGHT 36W

SPECIFICATION

PHOTOMETRIC CURVE

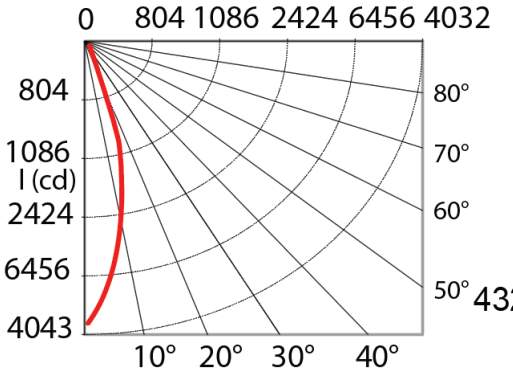

BEAM 36° AMPLITUDE DIAGRAM

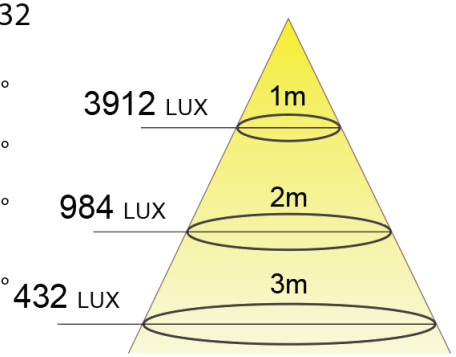

INSTALLATION

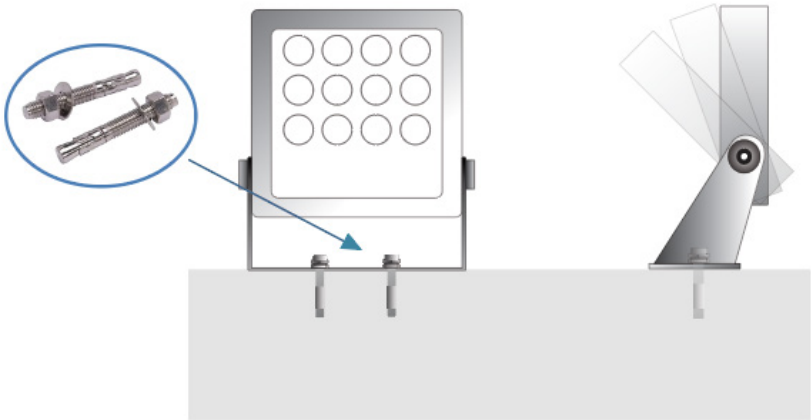

CONNECTOR IP68

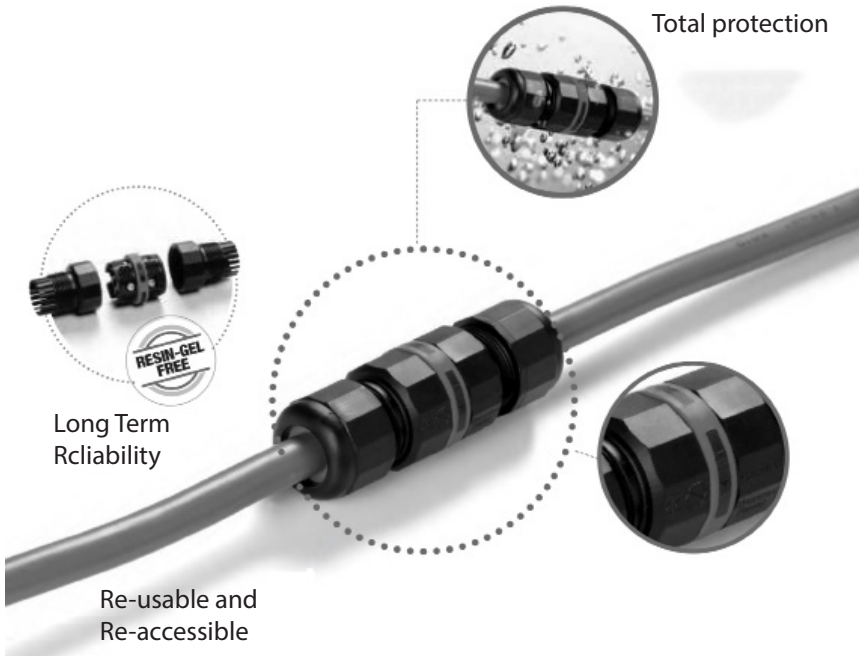

LED FLOODLIGHT 36W

POWER SUPPLIES - INPUT VOTAGE

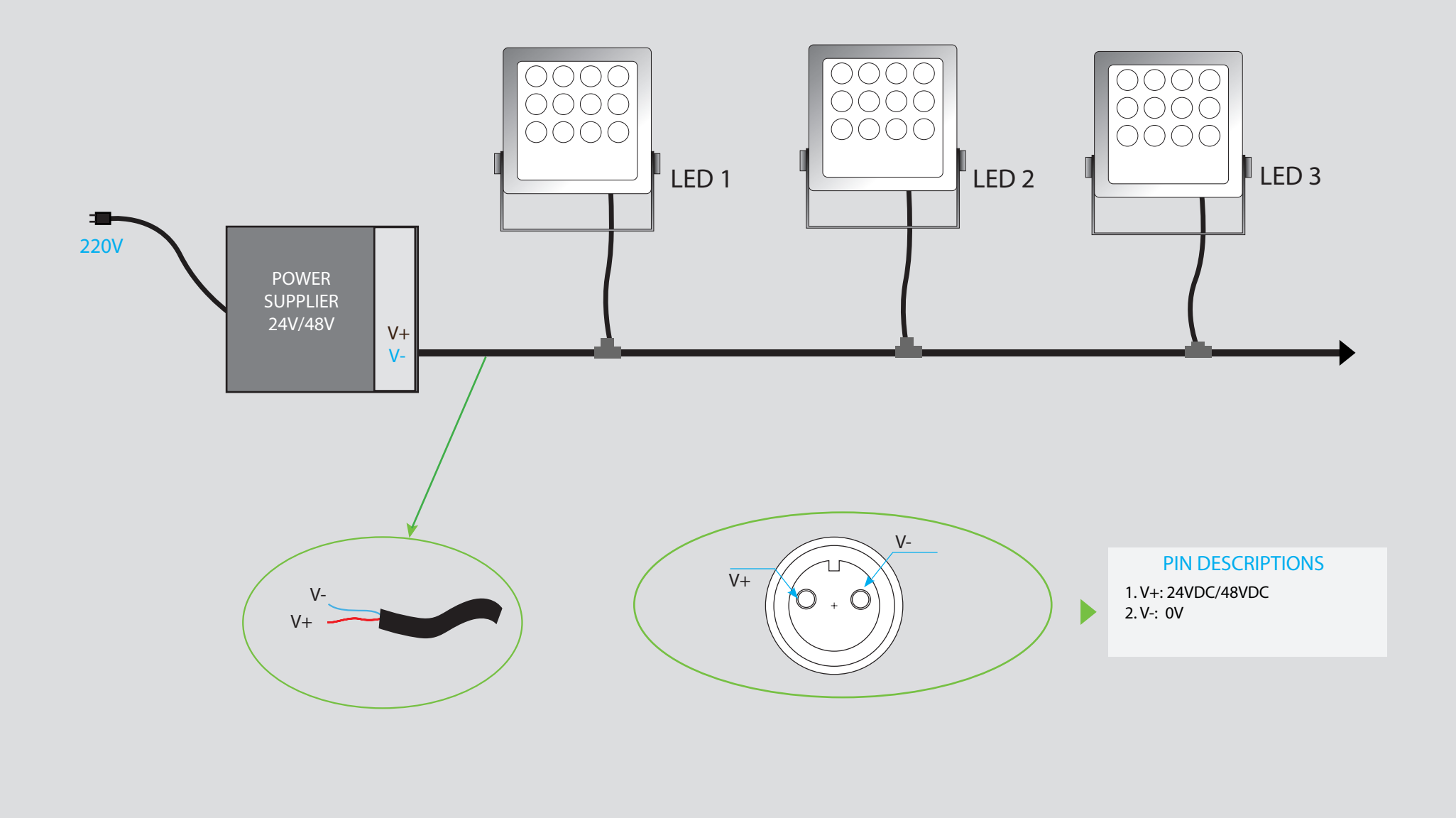

LED FLOODLIGHT 36W

DIAGRAM CONNECTOR - DMX PROTOCOL - 5 CORE & DECODER

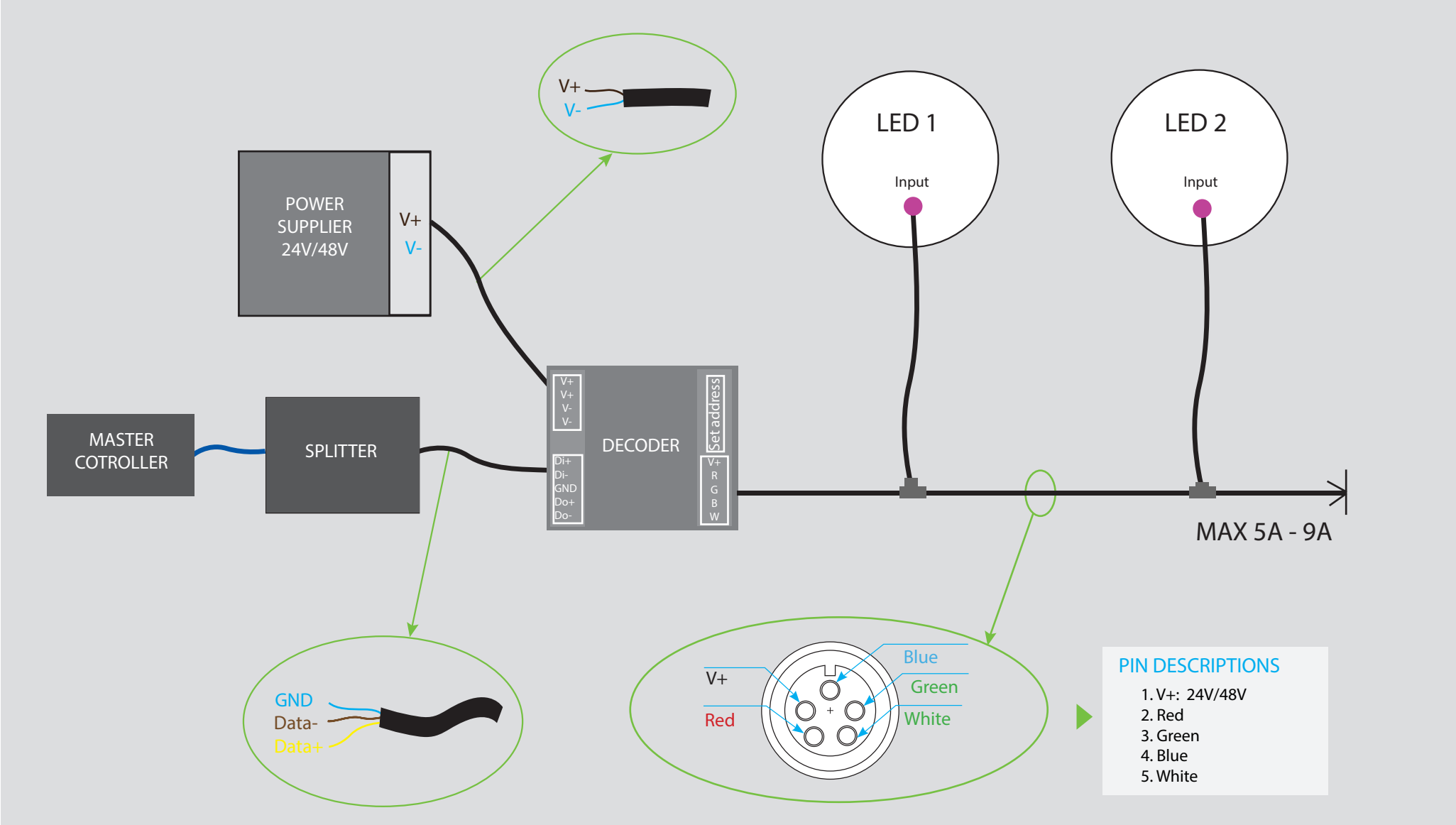

LED FLOODLIGHT 36W

DIAGRAM CONNECTOR - DMX PROTOCOL - 5 CORE

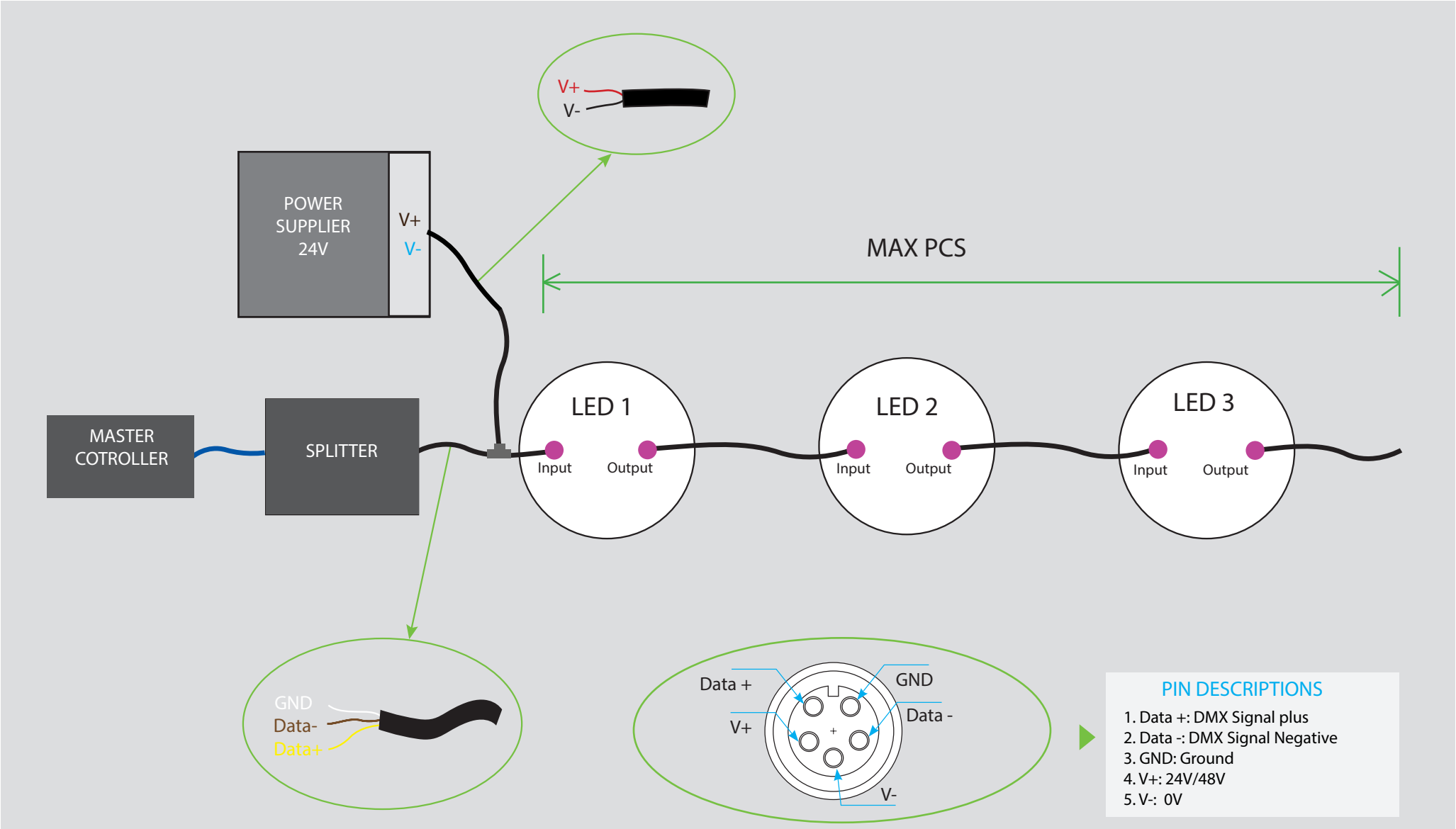

LED FLOODLIGHT 36W - Applications

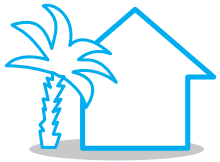

OUTDOOR

LANDSCAPE

HOTEL/RESTAURANT

FACADE BUILDING

LED FLOODLIGHT 36W - Applications

THANKS FOR YOUR

ATTENTION