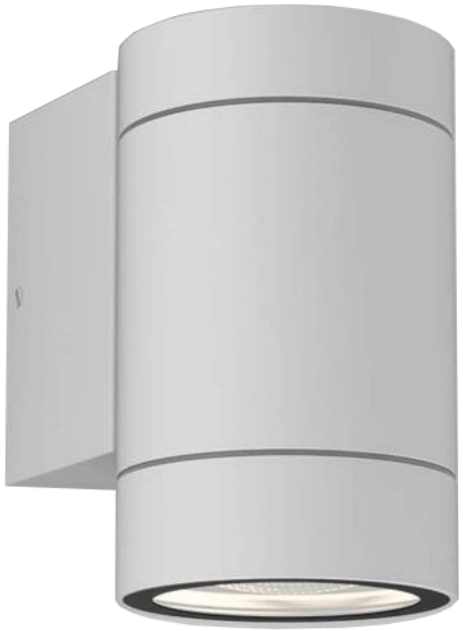

LED WALL LIGHT 10W - SERIES D
PRODUCT OUTDOOR

ASLED

LED WALL LIGHT 10W

SPECCIFICATION

SPECCIFICATION

- Order Code: WD010
- Input Voltage: 24VDC, 220V
- Dimension: Ø79xL129xH170 mm
- Chip LED: CREE
- Power consumption: 10W
- Lumen Output: 900 lm
- Material: Aluminium
- Efficiency: 90%
- Environment temperature: from -30° to 60°C
- Color[CRI]: 3000K, 4000k, 5000k
- CRI: >90
- Beam angle: 12° 24° 36° 50°
- IP Rating: IP65
- Life time: 50.000 hour
- Control: ON/OFF, DIM 0 - 10V, DALI, DMX512
- Standards:
  + RoHS; EMC protection
  + IEC 62031LED
  + IEC 60598 Luminaires

IP65 RoHS CE

LED WALL LIGHT 10W

TECHNICAL DETAILS

TECHNICAL DETAILS

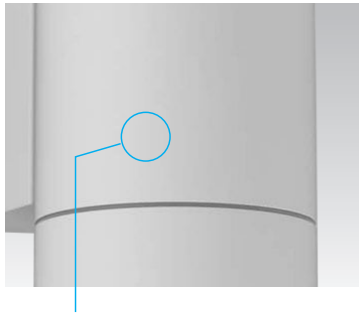

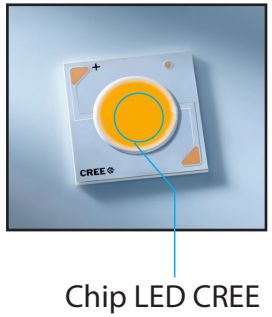

Select Color XX

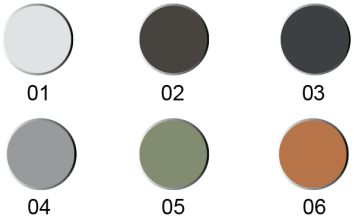

DIMENSIONS

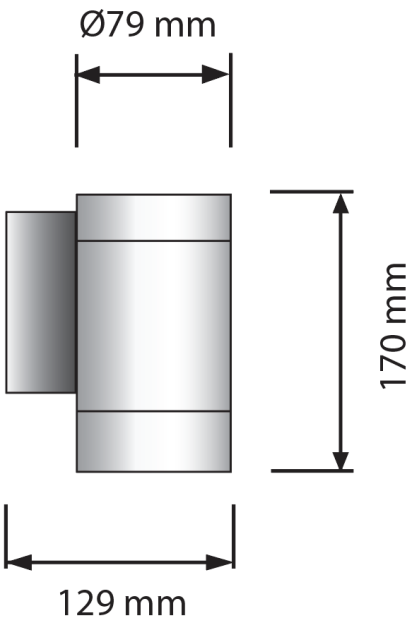

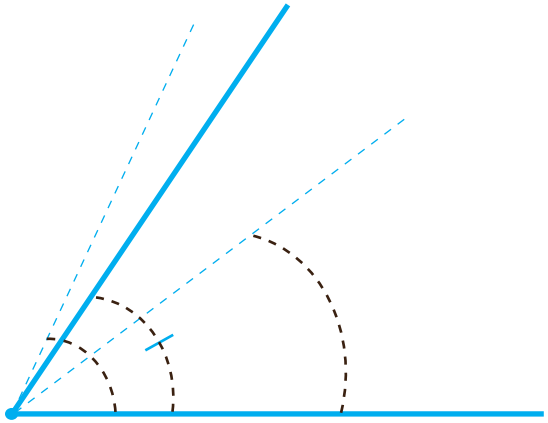

Beam Angle: 12° 24° 36° 50°

LED WALL LIGHT 10W

POWER SUPPLIES - INPUT VOTAGE

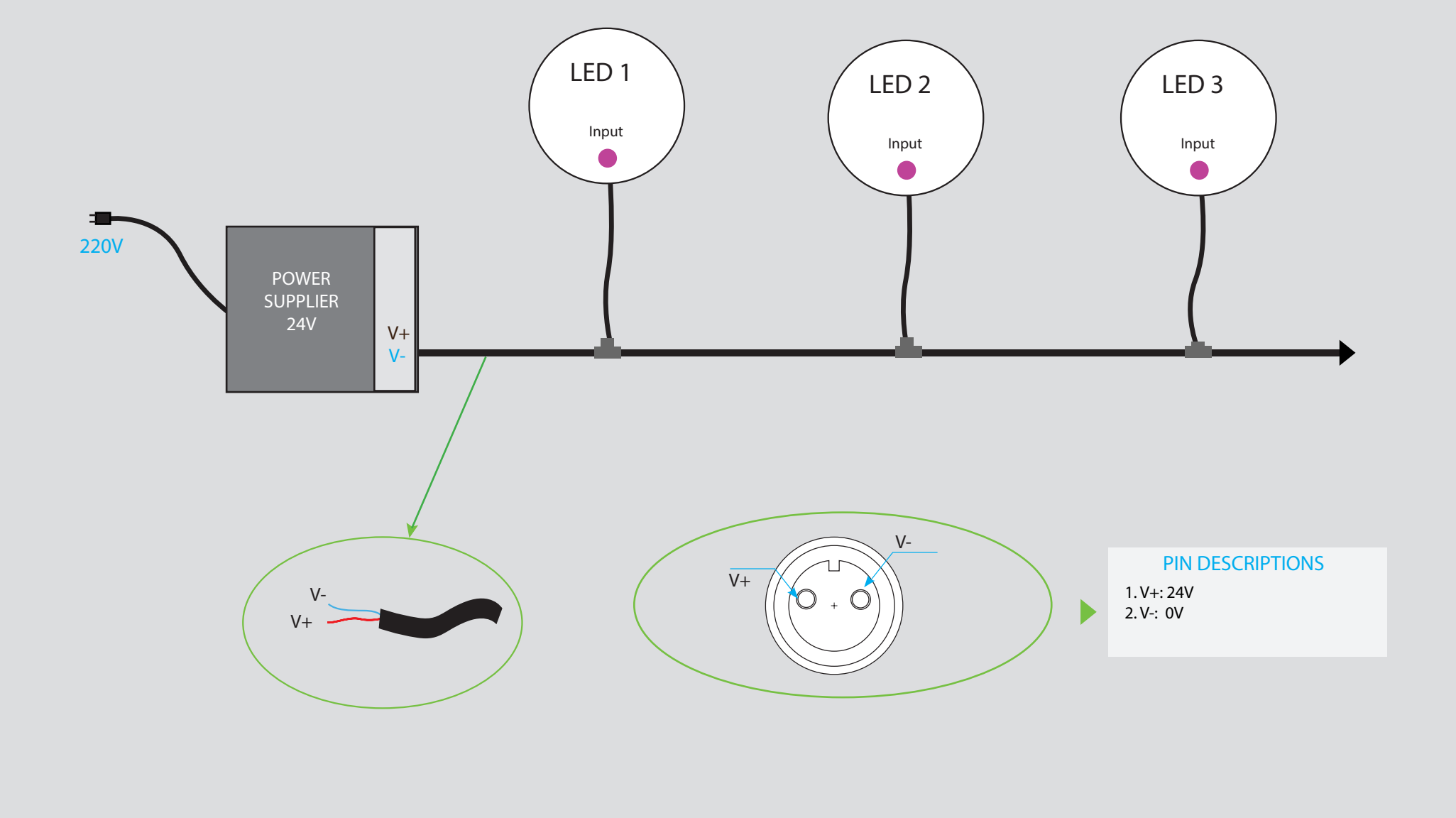

LED WALL LIGHT 10W - Applications

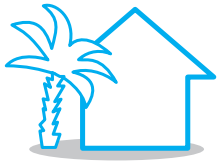

OUTDOOR

LANDSCAPE

HOTEL/RESTAURANT

FACADE BUILDING

LED WALL LIGHT 10W

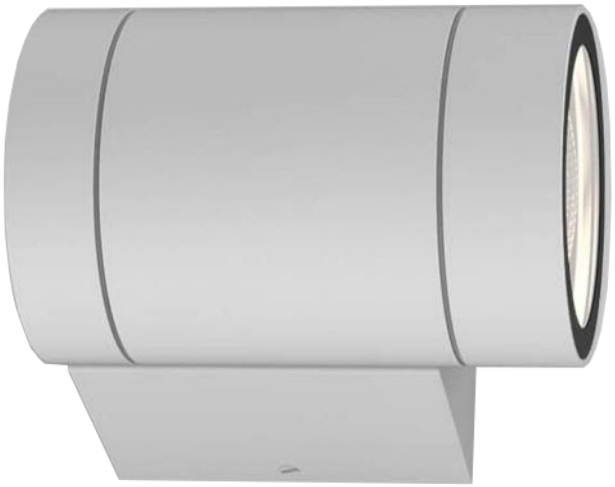

THANKS FOR YOUR

ATTENTION