LED DOWNLIGHT 18W - SERIES A
PRODUCT INDOOR

ASLED

LED DOWNLIGHT 18W

SPECIFICATION

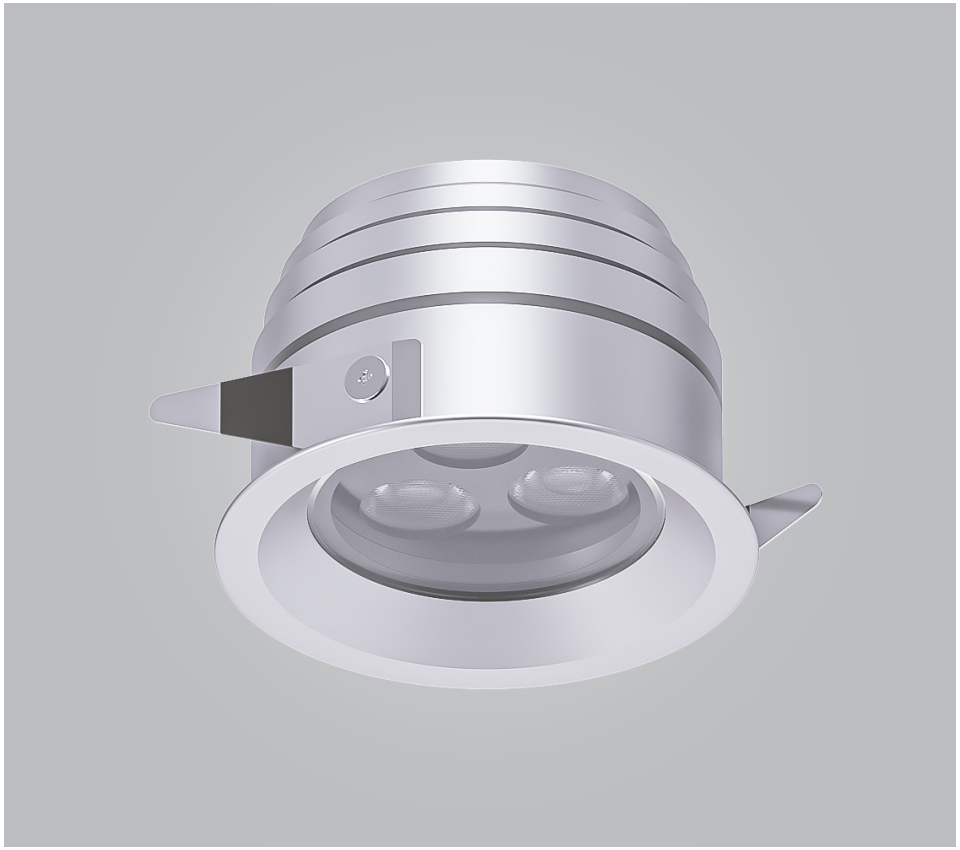

SPECIFICATION

- Order Code: DA018
- Input Voltage: 24Vdc, 220Vac, Dimmable
- Dimension: Ø110xH85 Cutout Ø101 mm
- Chip Leds: CREE
- Power consumption: 18W
- Luminous Flux: 1620Lm at 3000K, 18W, CRI>90, 36°
- Material: Aluminium
- Efficiency: 90%
- Environment temperature: from -30° to 60°C
- Color[CRI]: 3000K, 4000K, 5000K
- CRI > 90
- Beam angle: 12° 25° 36° 50°
- IP Rating: IP44 (Update IP67)
- Life time: 50.000 hours
- Control: ON/OFF, 0 - 10V, DALI, DMX
- Standards:
  + RoHS; EMC protection
  + IEC 62031LED
  + IEC 60598 Luminaires

IP44 IP67 RoHS CE

LED DOWNLIGHT 18W

TECHNICAL DETAILS

TECHNICAL DETAILS

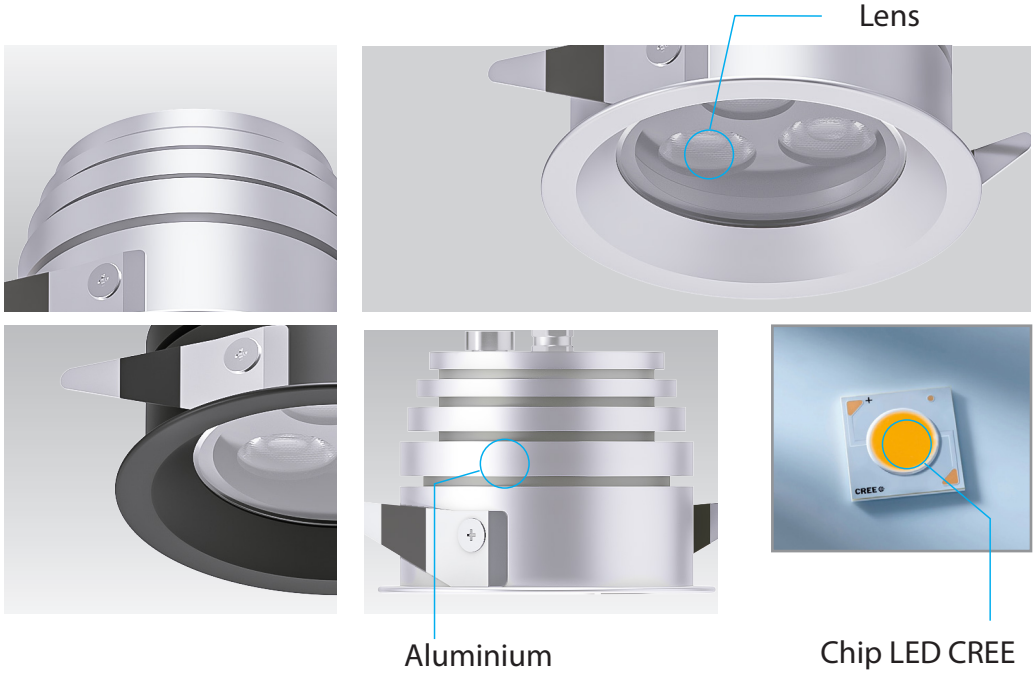

Legace

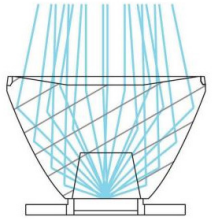

Select Color XX

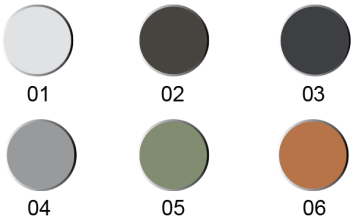

DIMENSIONS

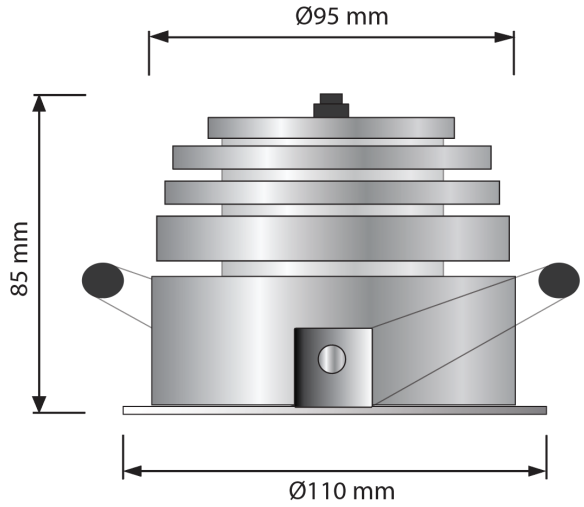

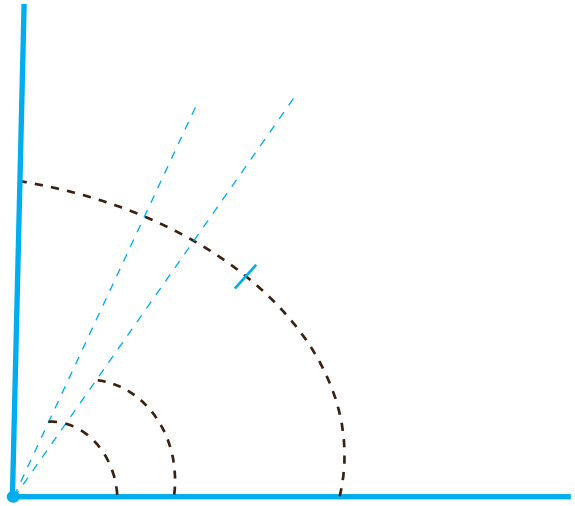

Beam Angle: 12° 24° 36° 50°

LED DOWNLIGHT 18W

SPECIFICATION

18W 3000K

PHOTOMETRIC CURVE

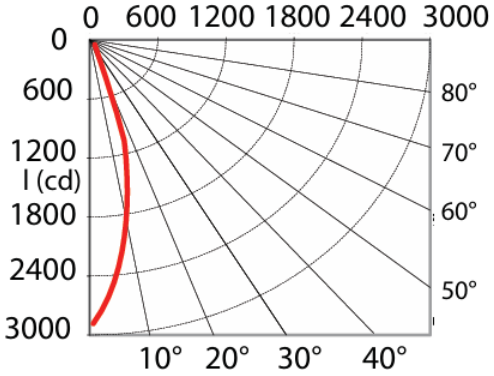

BEAM 36° AMPLITUDE DIAGRAM

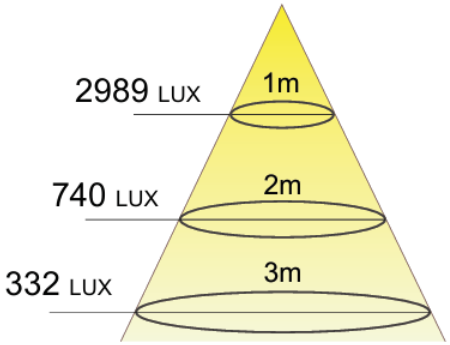

INSTALLATION

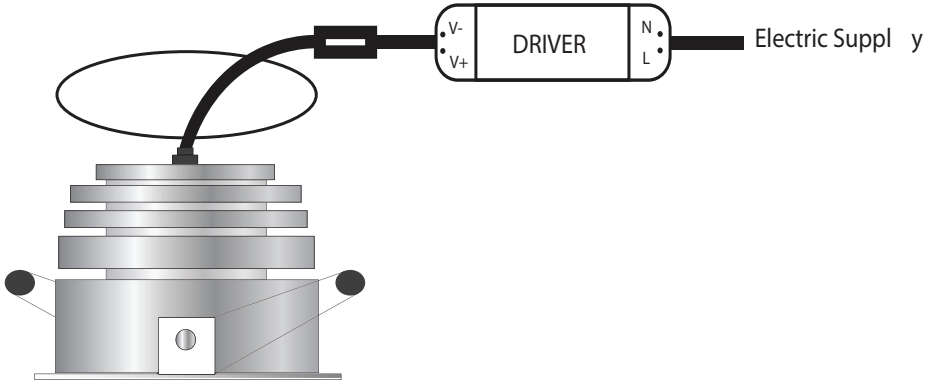

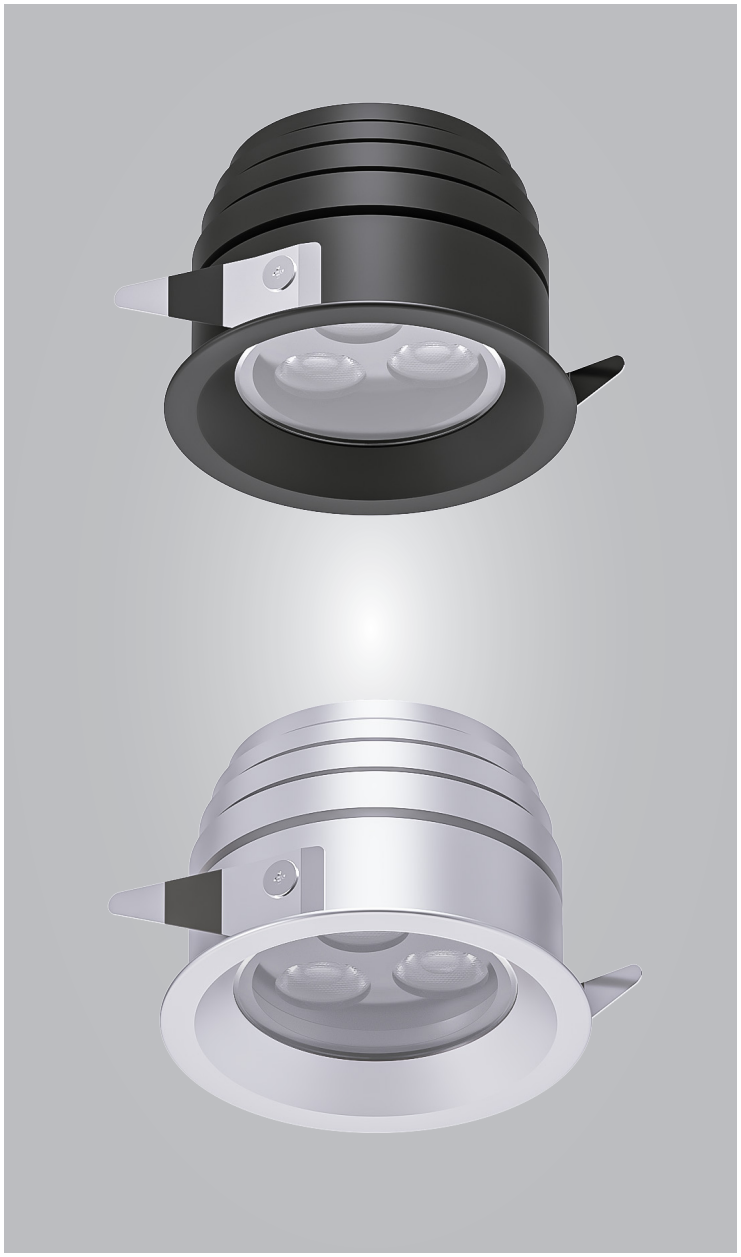

LED DOWNLIGHT 18W- Applications

INDOOR

OFFICE

HOTEL/RESTAURANT

LED DOWNLIGHT 18W - Applications

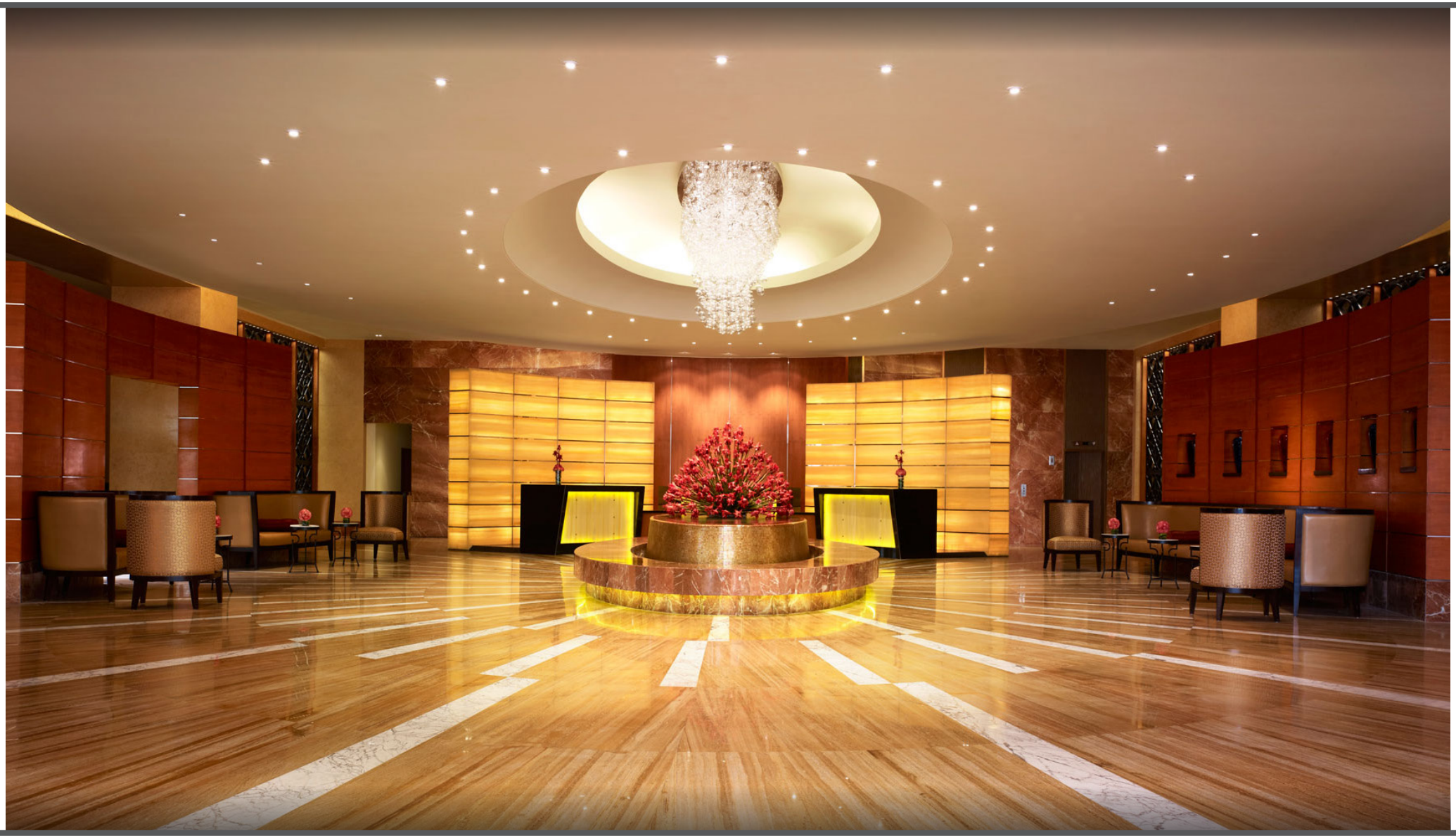

THANKS FOR YOUR

ATTENTION